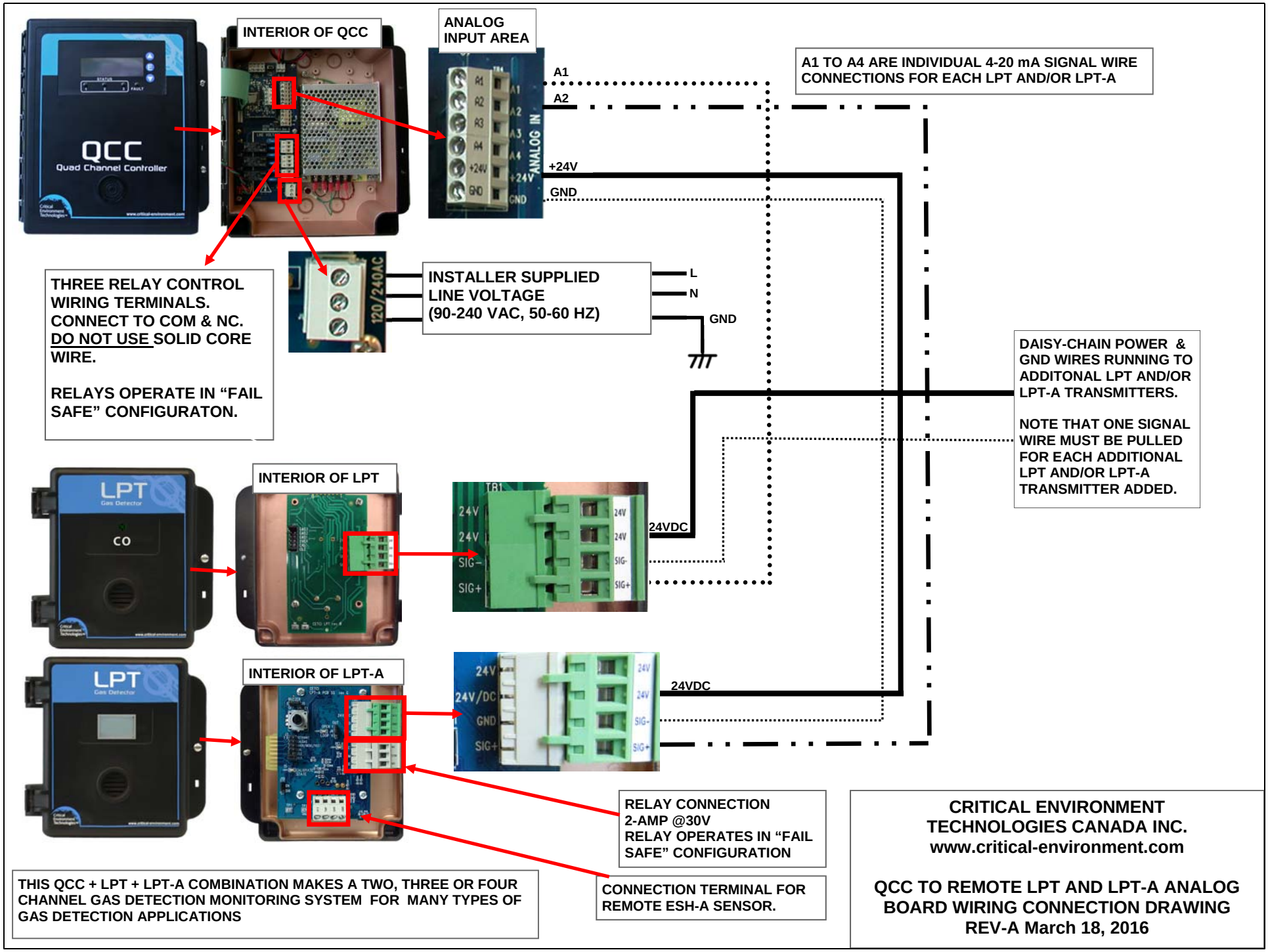
INTERIOR OF QCC
ANALOG INPUT AREA
A1 TO A4 ARE INDIVIDUAL 4-20 mA SIGNAL WIRE CONNECTIONS FOR EACH LPT AND/OR LPT-A
A1
A2
+24V
GND
THREE RELAY CONTROL WIRING TERMINALS. CONNECT TO COM & NC. DO NOT USE SOLID CORE WIRE.
RELAYS OPERATE IN "FAIL SAFE" CONFIGURATON.
INSTALLER SUPPLIED LINE VOLTAGE (90-240 VAC, 50-60 HZ)
L
N
GND
DAISY-CHAIN POWER & GND WIRES RUNNING TO ADDITONAL LPT AND/OR LPT-A TRANSMITTERS.
NOTE THAT ONE SIGNAL WIRE MUST BE PULLED FOR EACH ADDITIONAL LPT AND/OR LPT-A TRANSMITTER ADDED.
INTERIOR OF LPT
24VDC
INTERIOR OF LPT-A
24VDC
RELAY CONNECTION 2-AMP @30V RELAY OPERATES IN "FAIL SAFE" CONFIGURATION
CONNECTION TERMINAL FOR REMOTE ESH-A SENSOR.
THIS QCC + LPT + LPT-A COMBINATION MAKES A TWO, THREE OR FOUR CHANNEL GAS DETECTION MONITORING SYSTEM FOR MANY TYPES OF GAS DETECTION APPLICATIONS
CRITICAL ENVIRONMENT TECHNOLOGIES CANADA INC.
www.critical-environment.com
QCC TO REMOTE LPT AND LPT-A ANALOG BOARD WIRING CONNECTION DRAWING
REV-A March 18, 2016