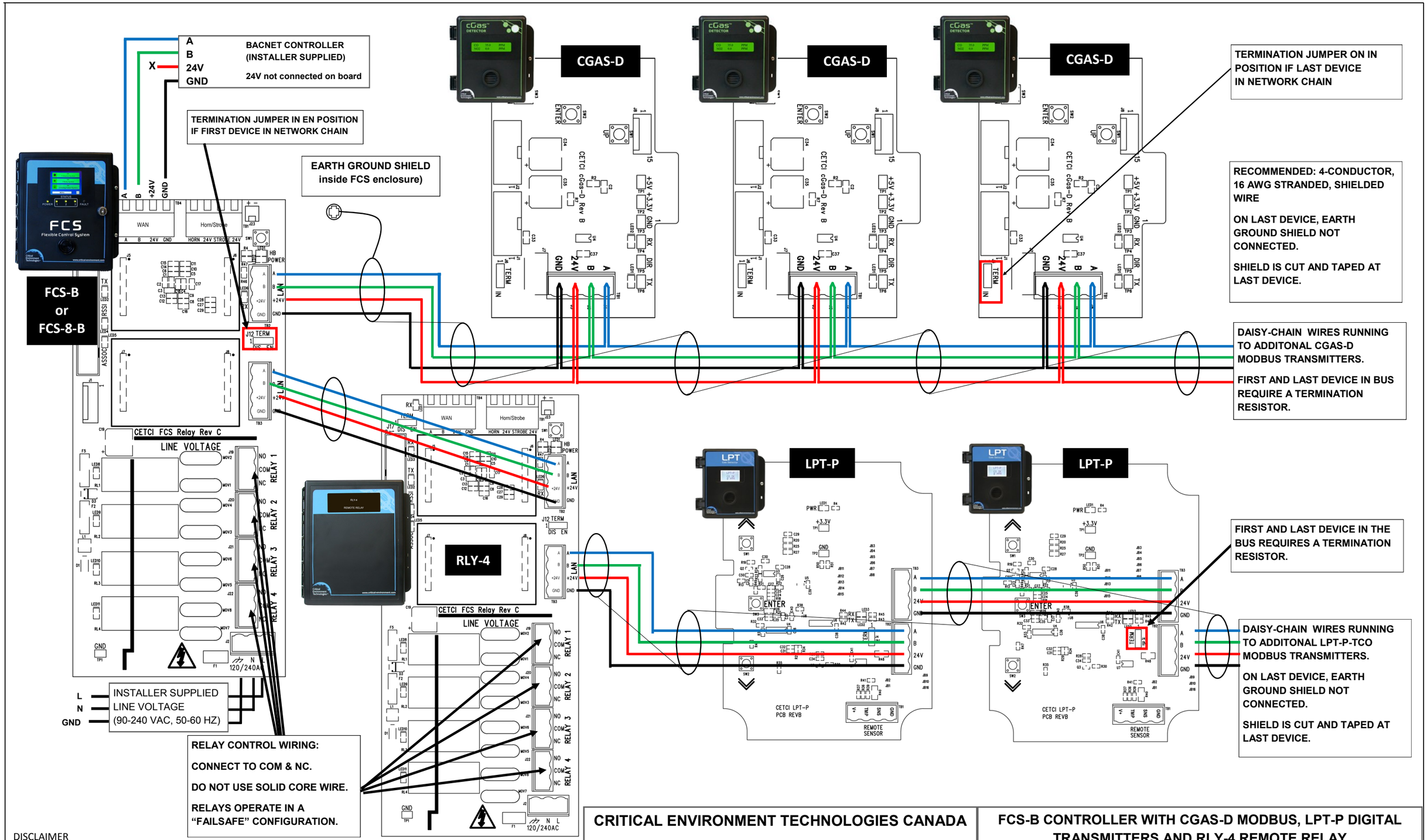

DISCLAIMER

Please note that while we take every effort to be as clear, concise and accurate as possible this material is intended to be diagrammatic only, we take no responsibility for cabling and / or conduit locations or distances and therefore additional components that may be required for a successful installation.

CRITICAL ENVIRONMENT TECHNOLOGIES CANADA

www.critical-environment.com

FCS-B CONTROLLER WITH CGAS-D MODBUS, LPT-P DIGITAL TRANSMITTERS AND RLY-4 REMOTE RELAY WIIRING CONNECTION DRAWING

REV-A June 7, 2019