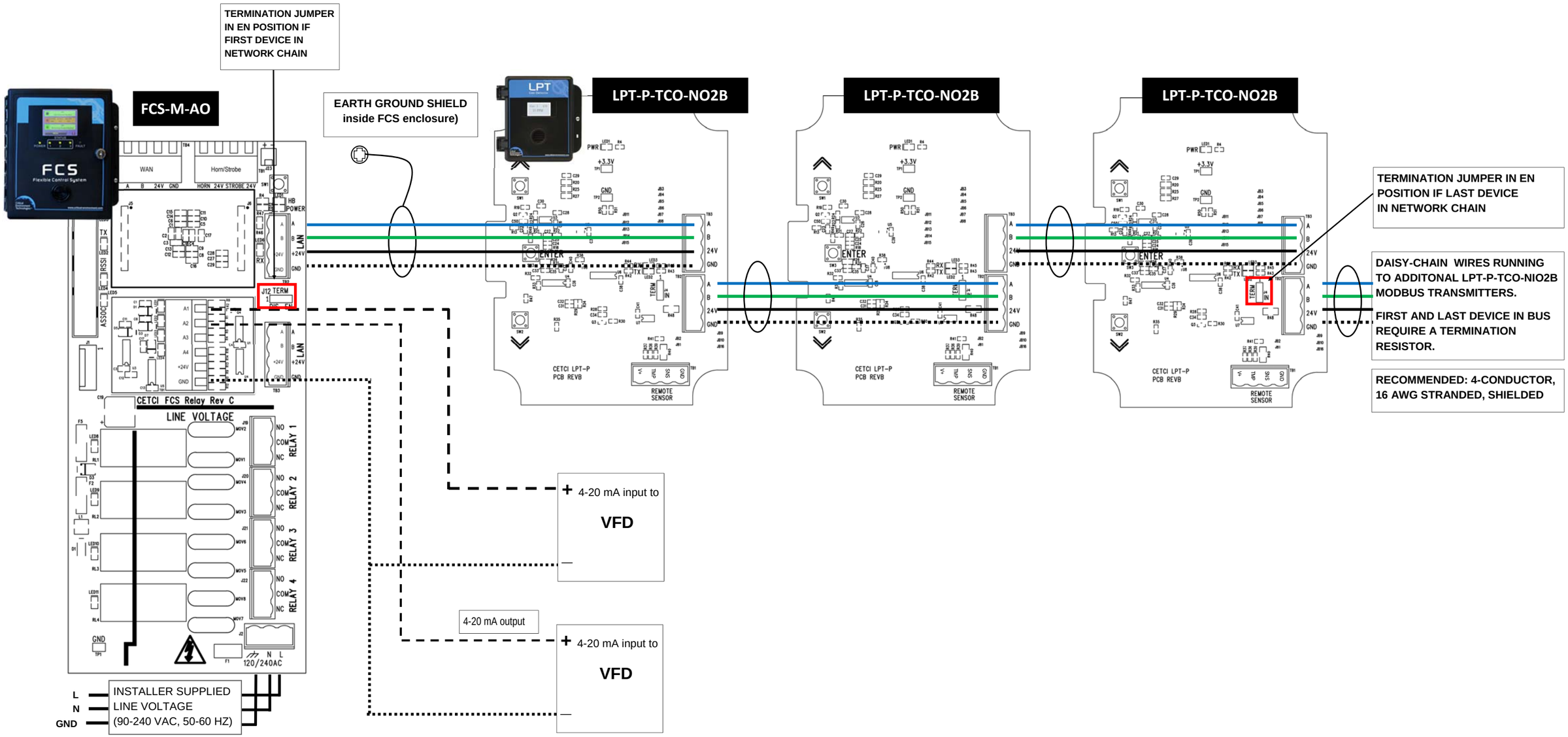

FCS-M–AO CONTROLLER WITH DIGITAL LPT-P-TCO-NO2B TRANSMITTERS WITH ANALOG OUTPUT WIRING CONNECTION DRAWING

REV-A June 22, 2017

CRITICAL ENVIRONMENT TECHNOLOGIES CANADA

www.critical-environment.com