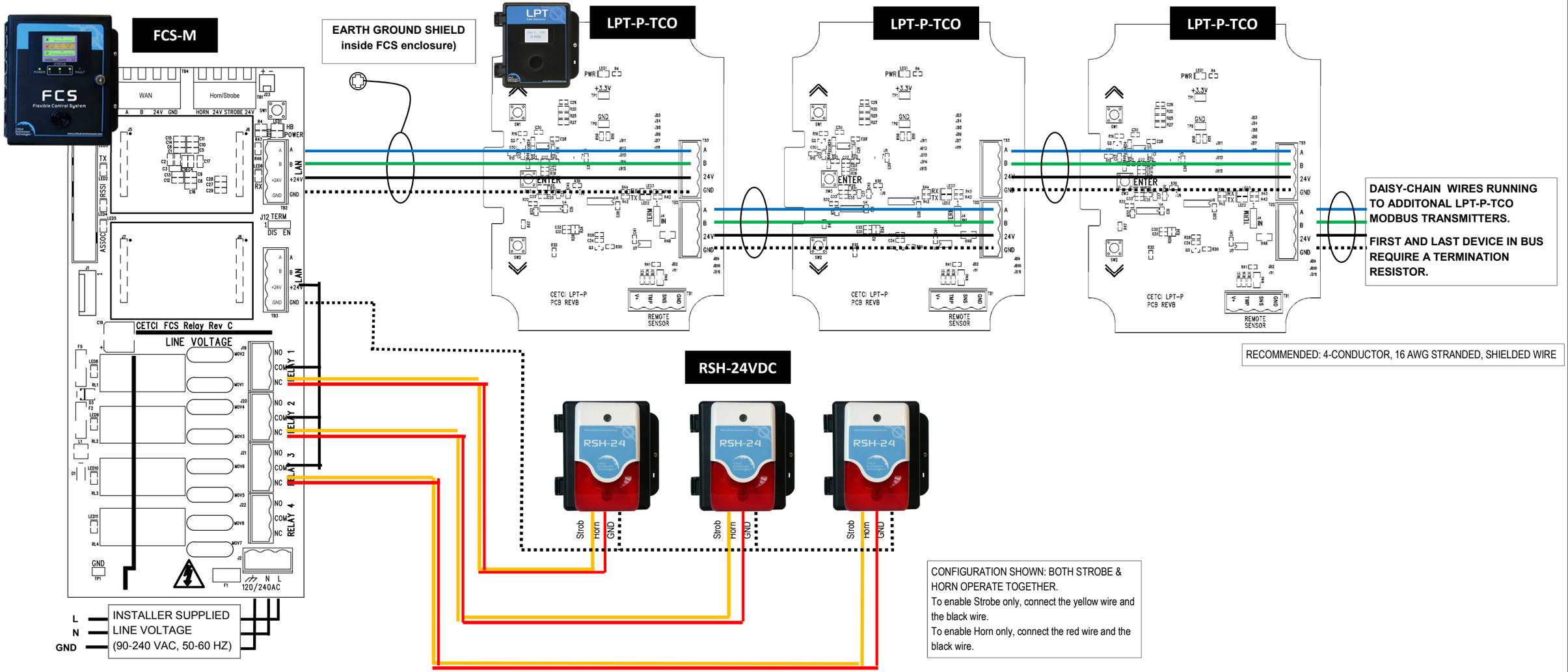

FCS-M CONTROLLER WITH DIGITAL LPT-P-TCO TRANSMITTER AND RSH-24VDC WIRING CONNECTION DRAWING

REV-A June 14, 2017

RELAYS OPERATE IN A "FAIL SAFE" CONFIGURATION.

CRITICAL ENVIRONMENT TECHNOLOGIES CANADA

www.critical-environment.com