CRITICAL ENVIRONMENT TECHNOLOGIES CANADA INC.
www.critical-environment.com

FCS-M CONTROLLER WITH OPTION –2AI TO LPT-A ANALOG TRANSMITTERS AND CGAS-A ANALOG TRANSMITTERS WIRING CONNECTION DRAWING
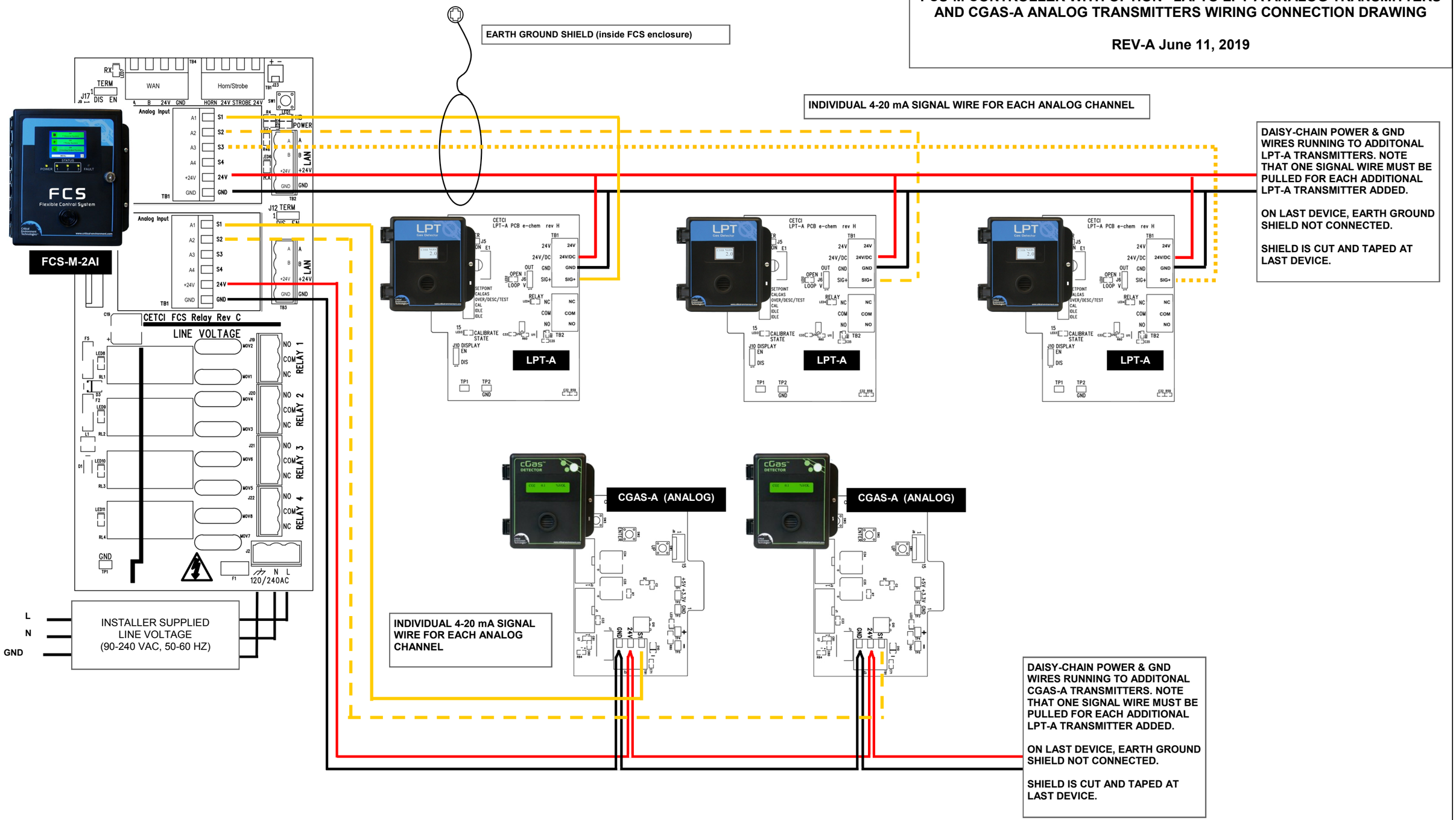
REV-A June 11, 2019